© 2016 California Department of Transportation
All Rights Reserved

Dist	COUNTY	ROUTE	POST MILES TOTAL PROJECT	SHEET No.	TOTAL SHEETS

Theresa Gabriel
REGISTERED ELECTRICAL ENGINEER

April 15, 2016
PLANS APPROVAL DATE

REGISTERED PROFESSIONAL ENGINEER Theresa Aziz Gabriel No. E15129 Exp. 6-30-16 ELECTRICAL STATE OF CALIFORNIA

THE STATE OF CALIFORNIA OR ITS OFFICERS OR AGENTS SHALL NOT BE RESPONSIBLE FOR THE ACCURACY OR COMPLETENESS OF SCANNED COPIES OF THIS PLAN SHEET.

TO ACCOMPANY PLANS DATED _____

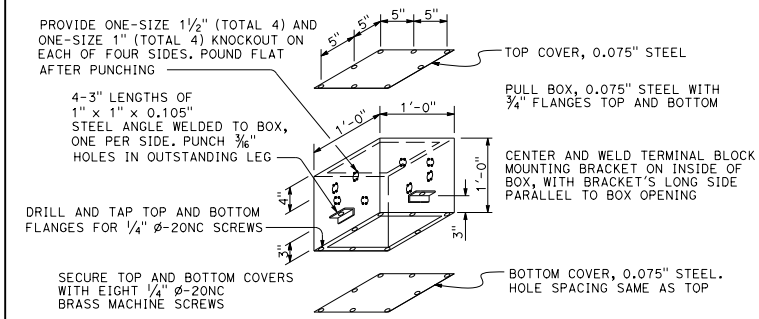

No. 7 PULL BOX (CEILING)

See Note 6

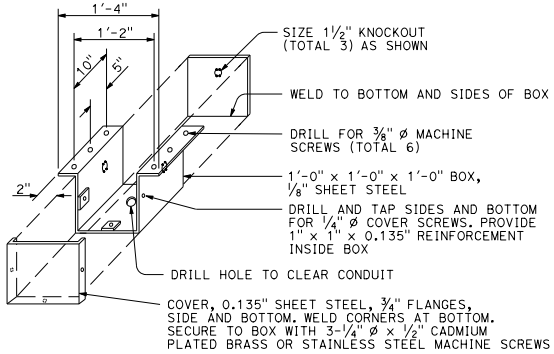

No. 8 PULL BOX

NOTES:

1. Corner joints shall be lapped and secured by spot welding or riveting.
2. Where cap screws are used to attach cover to box, either of the following methods of providing adequate threading may be used:
   a. Tack weld stainless steel Hex nut to bottom of flange (total 4)
   b. Tack weld a ¼" x ⅝" x 8" bar beneath flange (total 2)
3. Pound knockouts flat after punching.
4. Multiple size knockouts (concentric) shall not be permitted.
5. Pull box covers shall be marked as specified.
6. Installation of No. 7 pull box:
   a) Install with bottom flange flush with concrete.
   b) Both covers shall be on a box during pouring.
7. Install box parallel to top of railing. Cover box during pouring with ¼" plywood of sufficient size to provide 1:1 chamfer on 3 sides of cover. Upper edge of plywood shall fit against lower edge of rain tight hood.

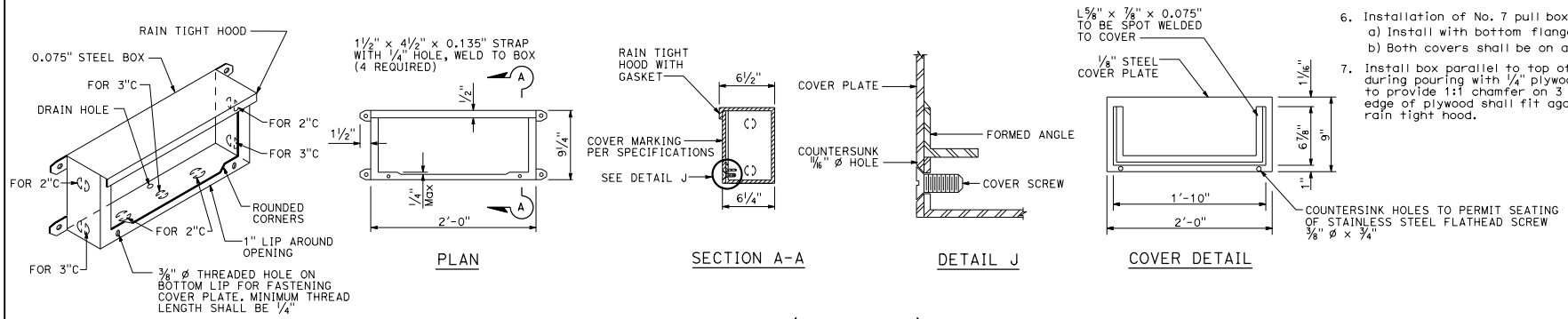

No. 9 PULL BOX (STRUCTURE)

See Note 7

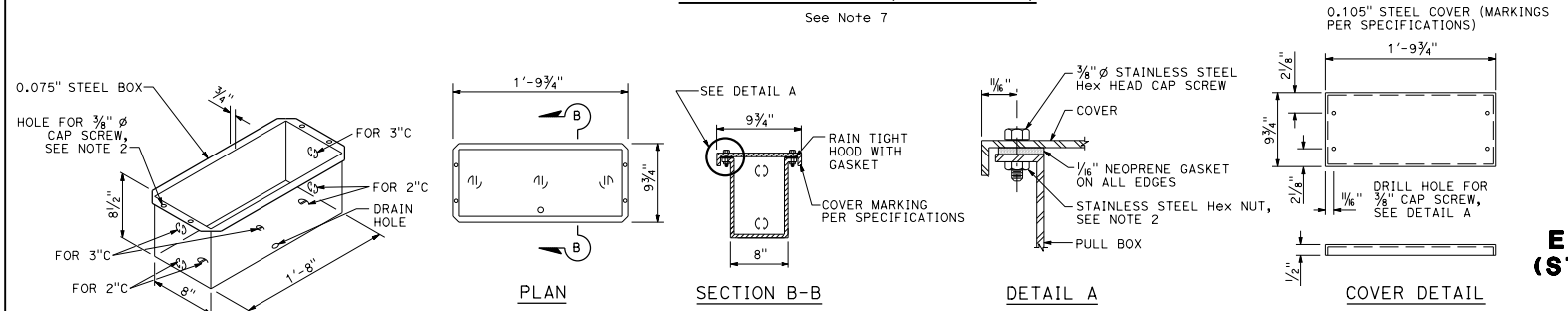

No. 9A PULL BOX (STRUCTURE)

STATE OF CALIFORNIA
DEPARTMENT OF TRANSPORTATION

ELECTRICAL SYSTEMS (STRUCTURE PULL BOX)

NO SCALE

RSP ES-9C DATED APRIL 15, 2016 SUPERSEDES RSP ES-9C DATED OCTOBER 30, 2015 AND STANDARD PLAN ES-9C DATED MAY 20, 2011 - PAGE 483 OF THE STANDARD PLANS BOOK DATED 2010.

REVISED STANDARD PLAN RSP ES-9C

2010 REVISED STANDARD PLAN RSP ES-9C

1-12-16