© 2011 California Department of Transportation
All Rights Reserved

Dist	COUNTY	ROUTE	POST MILES TOTAL PROJECT	SHEET No.	TOTAL SHEETS

REGISTERED CIVIL ENGINEER

May 20, 2011
PLANS APPROVAL DATE

REGISTERED PROFESSIONAL ENGINEER Stanley P. Johnson No. C57793 Exp. 3-31-12 CIVIL STATE OF CALIFORNIA

THE STATE OF CALIFORNIA OR ITS OFFICERS OR AGENTS SHALL NOT BE RESPONSIBLE FOR THE ACCURACY OR COMPLETENESS OF SCANNED COPIES OF THIS PLAN SHEET.

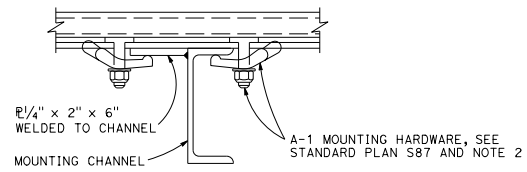

DETAIL K

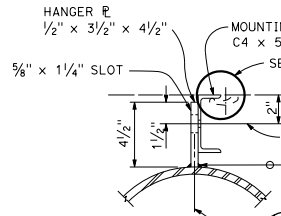

DETAIL G

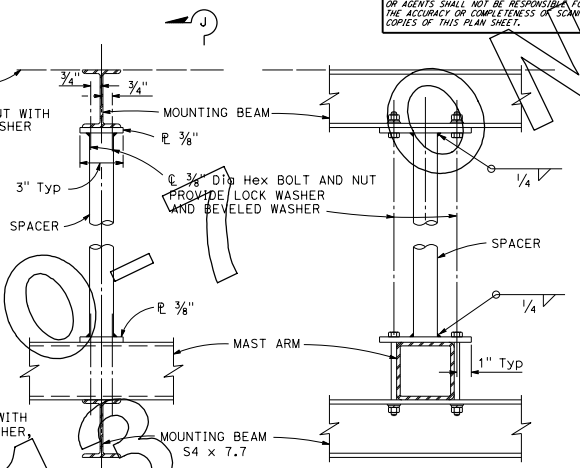

DETAIL H

SECTION J-J

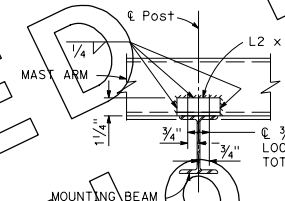

DETAIL A

NOTE:

Spacer required for double faced sign only.

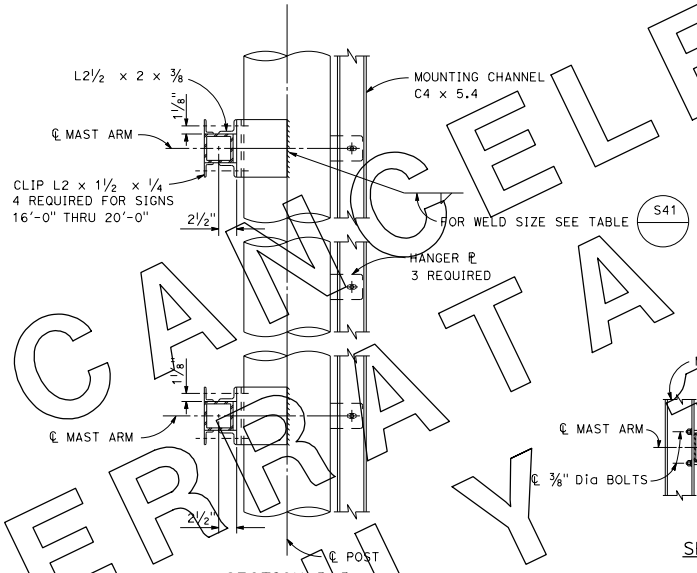

SECTION B-B

NOTE:

Mounting channel and hanger PL required for double faced signs 16'-0" thru 20'-0" only.

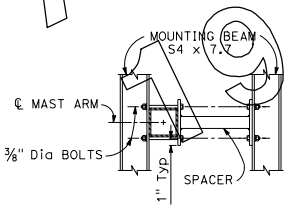

SECTION C-C

NOTE:

Typical end mount for double faced signs.

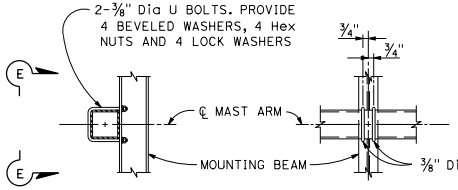

SECTION D-D

SECTION E-E

NOTE:

Typical connection to single faced signs.

NOTES:

1. For sections and details not shown, see S41.
2. Torque stainless steel sign panel mounting bolts to 9 foot-pounds.

STATE OF CALIFORNIA
DEPARTMENT OF TRANSPORTATION

OVERHEAD SIGNS-LIGHTWEIGHT BALANCED-SINGLE STEEL POST DETAILS

NO SCALE

S42

2010 STANDARD PLAN S42

CANCELED BY ERRATA NO. 10, JULY 2013

9-22-09