© 2011 California Department of Transportation
All Rights Reserved

Dist	COUNTY	ROUTE	POST MILES TOTAL PROJECT	SHEET No.	TOTAL SHEETS

REGISTERED CIVIL ENGINEER

May 20, 2011
PLANS APPROVAL DATE

REGISTERED PROFESSIONAL ENGINEER
Stanley P. Johnson
No. C57793
Exp. 3-31-12
CIVIL
STATE OF CALIFORNIA

THE STATE OF CALIFORNIA OR ITS OFFICERS OR AGENTS SHALL NOT BE RESPONSIBLE FOR THE ACCURACY OR COMPLETENESS OF SCANNED COPIES OF THIS PLAN SHEET.

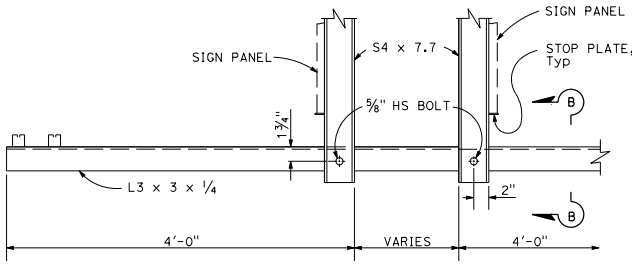

SIDE VIEW - DOUBLE FACED SIGN - END MOUNT

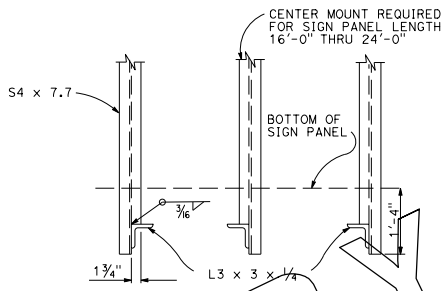

FRONT VIEW

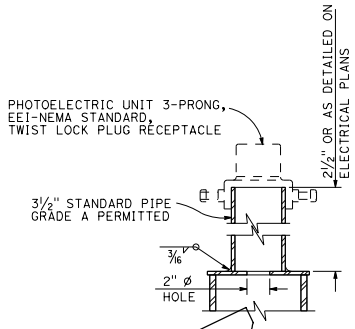

PHOTOELECTRIC UNIT

NOTE:

For details not shown, see "Side View - Single Faced Sign Type A, B & C" details.

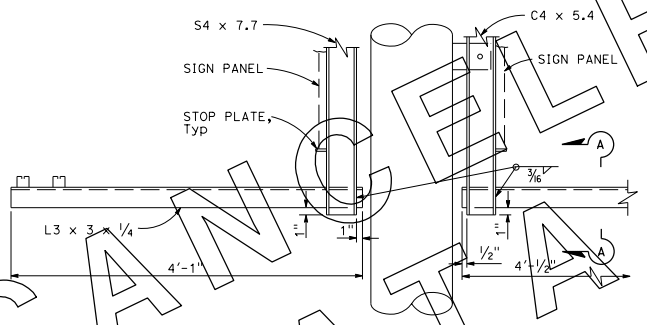

SIDE VIEW - DOUBLE FACED SIGN - CENTER MOUNT
(Required only on balanced single post sign panel length 16'-0" thru 24'-0")

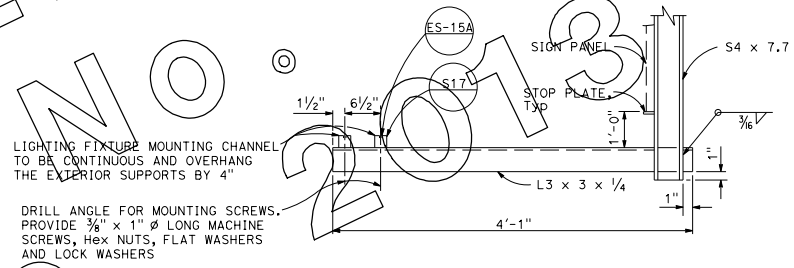

SIDE VIEW - SINGLE FACED SIGN TYPES A, B & C
LIGHTING FIXTURE MOUNTING DETAIL
SIGNS GREATER THAN 5'-6" IN LENGTH

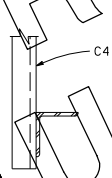

PART SECTION A-A

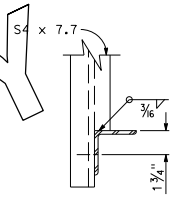

PART SECTION B-B

CANCELLED BY ERRATA NO. 10-7 ON JULY 19, 2013

STATE OF CALIFORNIA
DEPARTMENT OF TRANSPORTATION

OVERHEAD SIGNS-LIGHTWEIGHT LIGHT FIXTURE MOUNTING DETAILS

NO SCALE

S47

2010 STANDARD PLAN S47

6-30-10