© 2013 California Department of Transportation
All Rights Reserved

Dist	COUNTY	ROUTE	POST MILES TOTAL PROJECT	SHEET No.	TOTAL SHEETS

REGISTERED CIVIL ENGINEER

July 19, 2013
PLANS APPROVAL DATE

Tiliat Satter
No. C42892
Exp. 3-31-14
CIVIL
STATE OF CALIFORNIA
REGISTERED PROFESSIONAL ENGINEER

THE STATE OF CALIFORNIA OR ITS OFFICERS OR AGENTS SHALL NOT BE RESPONSIBLE FOR THE ACCURACY OR COMPLETENESS OF SCANNED COPIES OF THIS PLAN SHEET.

TO ACCOMPANY PLANS DATED _____

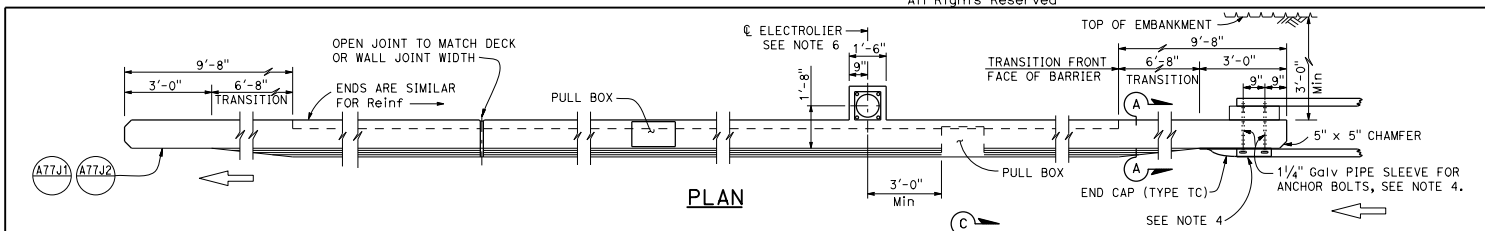

PLAN

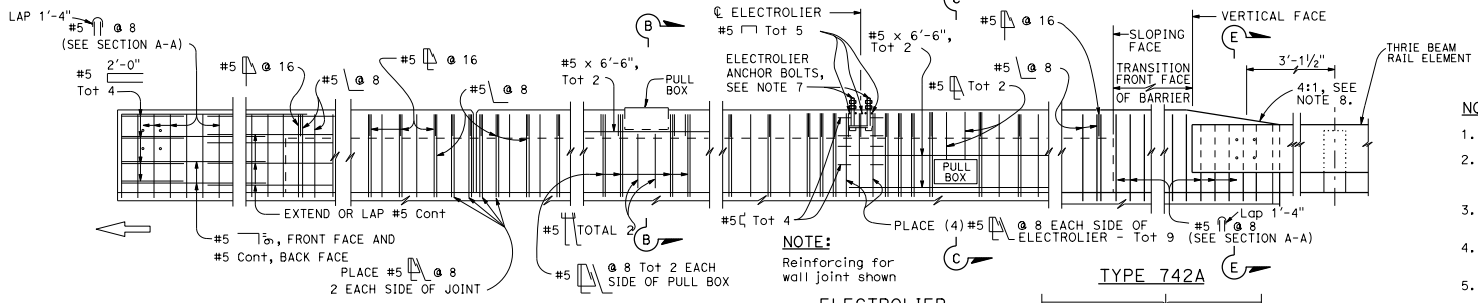

METAL RAILING CONNECTION

DECK OR WALL JOINT

ELEVATION

ELECTROLIER (See Note 5)

TYPE 742A

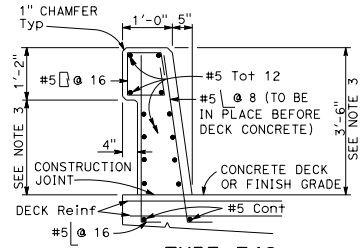

TYPE 742

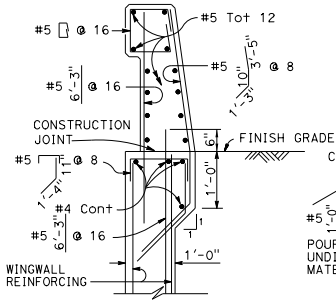

TYPE 742A

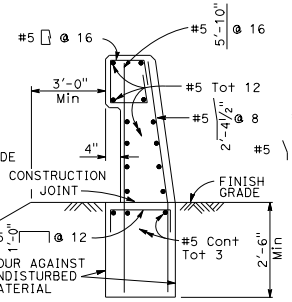

TYPE 742B

NOTE: Types 742A & 742B are similar to Type 742 except as noted

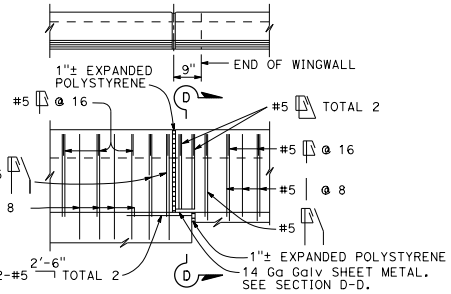

TYPE 742A

TYPE 742B

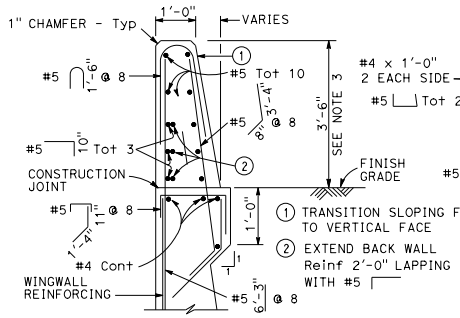

SECTION A-A

Details shown for barrier anchorage to Type 742A. Anchorage for barrier Types 742 and 742A are similar to their respective details.

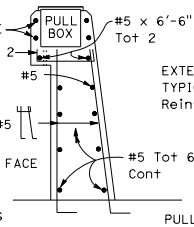

SECTION B-B

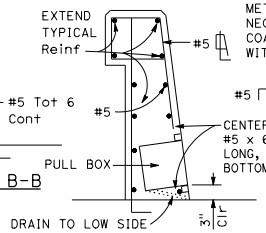

SECTION C-C
See Notes

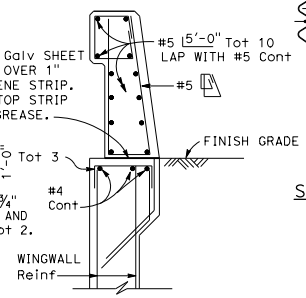

SECTION D-D

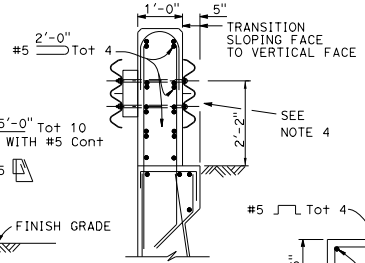

SECTION E-E
See Note 4

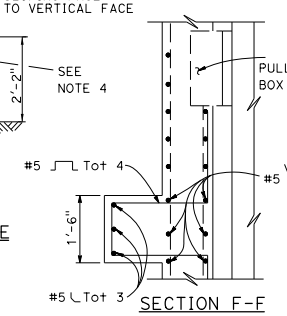

SECTION F-F

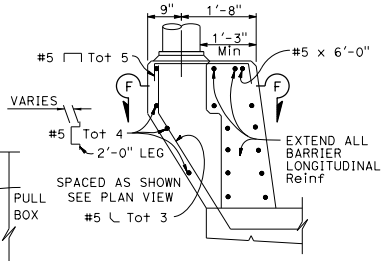

PEDESTAL ELEVATION

NOTES:

1. Walls are to be backfilled before barrier is placed.
2. Clearance to reinforcing steel in barrier to be 1", except as noted. Longitudinal reinforcement to stop at all expansion joints.
3. Dimensions may vary with roadway cross slope and with certain thickness of surfacing. See Project Plans.
4. For typical metal railing connection details not shown, see Revised Standard Plans RSP A77U1 and RSP A77U2.
5. See Standard Plans ES-9A, ES-9B, ES-9C, ES-9D and ES-9E for electrical details. The maximum number of conduits in the barrier is limited to two 2" conduits along with one 3" conduit. When a 3" conduit is used, it is restricted to the base of the barrier.
6. For electrolier mounting details, See Standard Plans ES-6A and ES-6B.
7. Minimum concrete edge distance, to the reinforcing shown, shall be maintained. Edge distance may be adjusted to accommodate increase in concrete cover for architectual treatment.
8. Taper the top of the end of the bridge railing at 4:1 to match the top elevation of the thrie beam rail element.

STATE OF CALIFORNIA
DEPARTMENT OF TRANSPORTATION

CONCRETE BARRIER TYPE 742

NO SCALE

RSP B11-57 DATED JULY 19, 2013 SUPERSEDES STANDARD PLAN B11-57 DATED MAY 20, 2011 - PAGE 299 OF THE STANDARD PLANS BOOK DATED 2010.

REVISED STANDARD PLAN RSP B11-57

2010 REVISED STANDARD PLAN RSP B11-57

6-27-13