© 2016 California Department of Transportation
All Rights Reserved

Dist	COUNTY	ROUTE	POST MILES TOTAL PROJECT	SHEET No.	TOTAL SHEETS

REGISTERED CIVIL ENGINEER

July 15, 2016
PLANS APPROVAL DATE

REGISTERED PROFESSIONAL ENGINEER — Tiliat Satter — No. C42892 — Exp. 3-31-18 — CIVIL — STATE OF CALIFORNIA

THE STATE OF CALIFORNIA OR ITS OFFICERS OR AGENTS SHALL NOT BE RESPONSIBLE FOR THE ACCURACY OR COMPLETENESS OF SCANNED COPIES OF THIS PLAN SHEET.

TO ACCOMPANY PLANS DATED _____

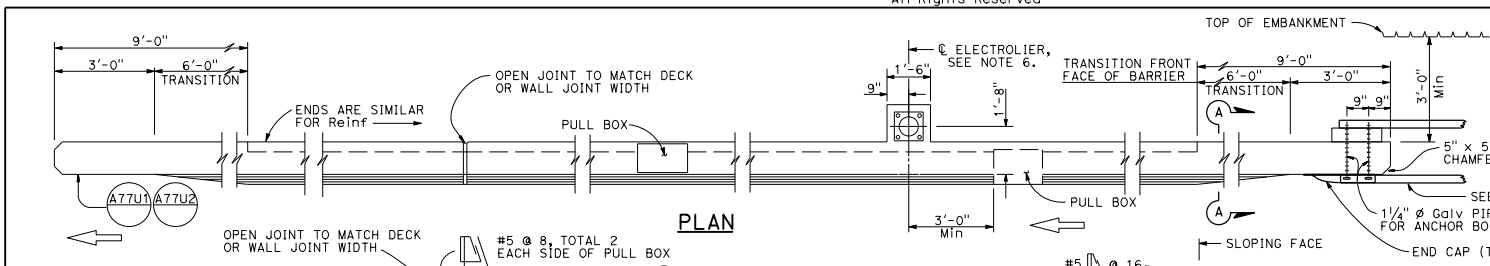

PLAN

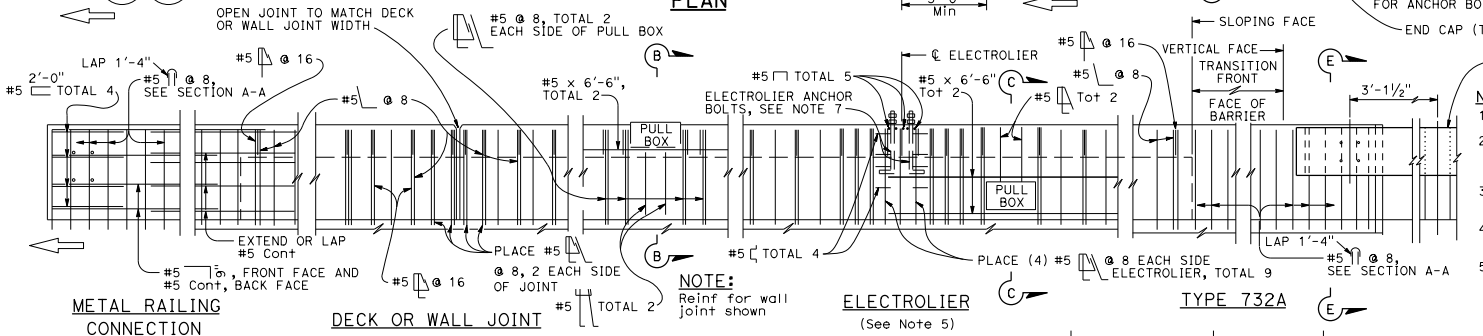

METAL RAILING CONNECTION

DECK OR WALL JOINT

NOTE: Reinf for wall joint shown

ELECTROLIER (See Note 5)

TYPE 732A

ELEVATION

NOTES:

1. Walls are to be backfilled before barrier is placed.
2. Clearance to reinforcing steel in barrier to be 1", except as noted. Longitudinal reinforcement to stop at all expansion joints.
3. Dimensions may vary with roadway cross slope and with certain thickness of surfacing. See Project Plans.
4. For typical metal railing connection details not shown, see Standard Plans A77U1 and A77U2.
5. See Standard Plans ES-9A, ES-9B, Revised Standard Plans RSP ES-9C, RSP ES-9D and RSP ES-9E for electrical details. The maximum number of conduits in the barrier is limited to two 2" conduits along with one 3" conduit. When a 3" conduit is used, it is restricted to the base of the barrier.
6. For electrolier mounting details, See Revised Standard Plans RSP ES-6A and RSP ES-6B.
7. Minimum concrete edge distance, to the reinforcing shown, shall be maintained. Edge distance may be adjusted to accommodate increase in concrete cover for architectual treatment.

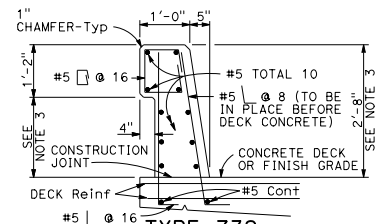

TYPE 732

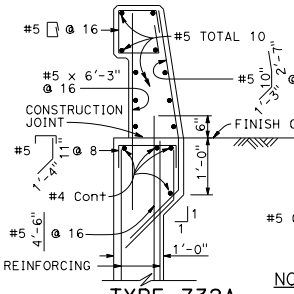

TYPE 732A

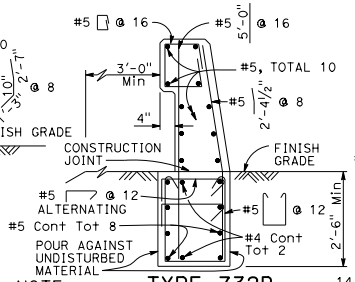

TYPE 732B

NOTE: Types 732A and 732B are similar to Type 732 except as noted.

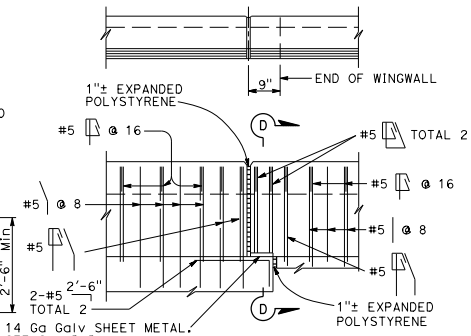

TYPE 732A

TYPE 732B

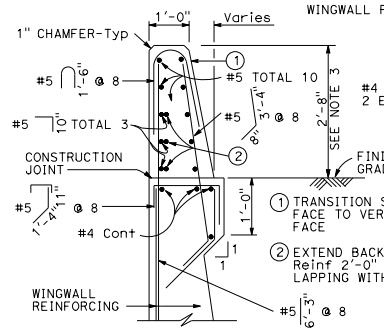

SECTION A-A

Details shown for barrier anchorage to Type 732A. Anchorage for barrier Types 732 and 732A are similar to their respective details.

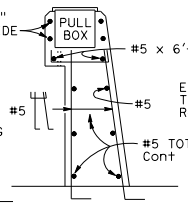

SECTION B-B

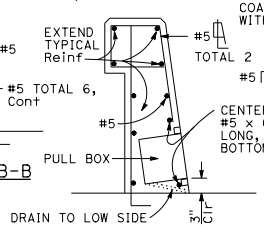

SECTION C-C
See Notes

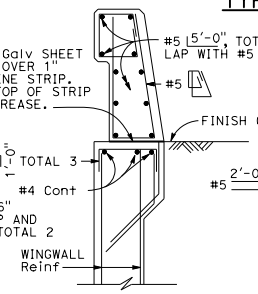

SECTION D-D

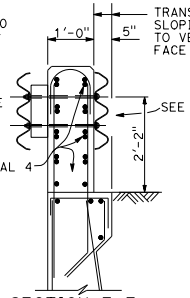

SECTION E-E
See Notes

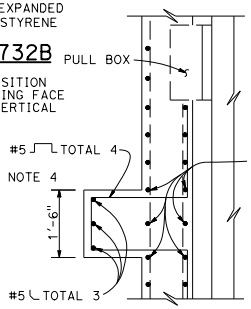

SECTION F-F

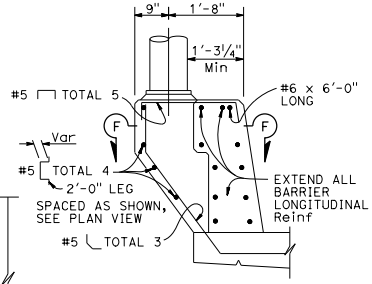

PEDESTAL ELEVATION

STATE OF CALIFORNIA
DEPARTMENT OF TRANSPORTATION

CONCRETE BARRIER TYPE 732

NO SCALE

RSP B11-55 DATED JULY 15, 2016 SUPERSEDES STANDARD PLAN B11-55
DATED OCTOBER 30, 2015 - PAGE 315 OF THE STANDARD PLANS BOOK DATED 2015.

REVISED STANDARD PLAN RSP B11-55

2015 REVISED STANDARD PLAN RSP B11-55

6-28-16