© 2017 California Department of Transportation
All Rights Reserved

Dist	COUNTY	ROUTE	POST MILES TOTAL PROJECT	SHEET No.	TOTAL SHEETS

Randell D. Hiatt
REGISTERED CIVIL ENGINEER

July 21, 2017
PLANS APPROVAL DATE

REGISTERED PROFESSIONAL ENGINEER
Randell D. Hiatt
No. C50200
Exp. 6-30-19
CIVIL
STATE OF CALIFORNIA

THE STATE OF CALIFORNIA OR ITS OFFICERS OR AGENTS SHALL NOT BE RESPONSIBLE FOR THE ACCURACY OR COMPLETENESS OF SCANNED COPIES OF THIS PLAN SHEET.

TO ACCOMPANY PLANS DATED _____

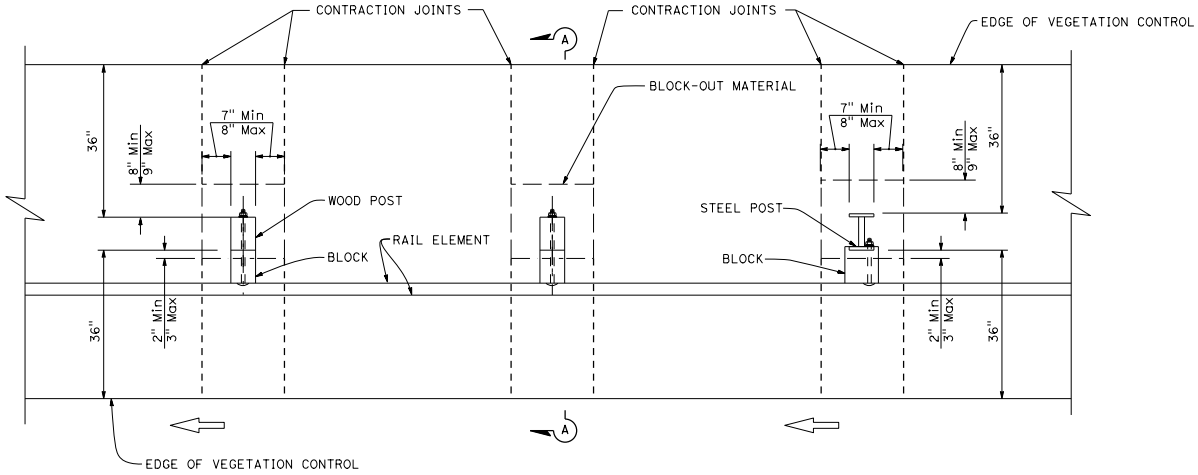

PLAN

NOTES:

1. Where the distance between back of post and hinge point is less than 42", construct vegetation control to 6" from hinge point while maintaining the 8" block-out at back of post.
2. Where paved shoulder is constructed within 36" in front of the post, construct vegetation control to the edge of paved shoulder.
3. For wood post sizes, see Revised Standard Plan RSP A77N1.
4. For steel post sizes, see Revised Standard Plan RSP A77N2.
5. For details not shown, see Revised Standard Plans RSP A77L1 and RSP A77L2.
6. Where vegetation control is adjacent to a dike on a cut slope, construct vegetation control flush with the top edge of dike.
7. Vegetation control must slope to drain water.
8. Concrete over block-out material depth, construct 3/8" Min to 5/8" Max.
9. This plan for vegetation control installation only.

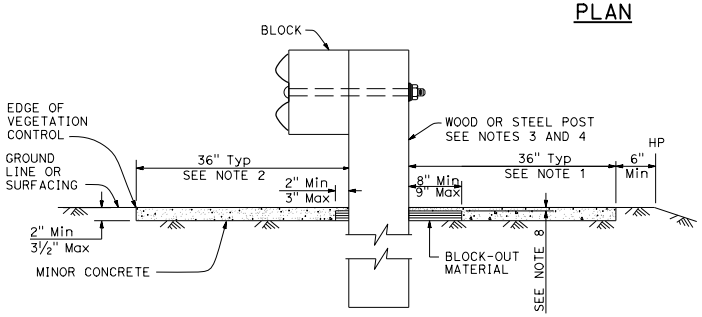

SECTION A-A
Without Existing Dike

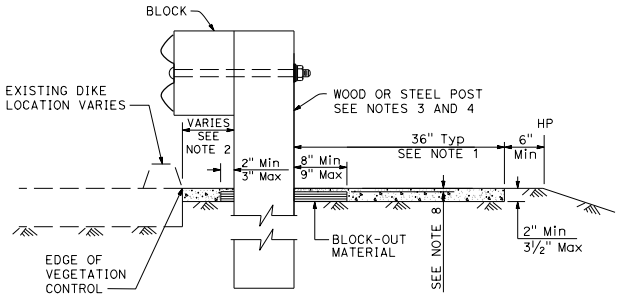

SECTION A-A
With Existing Dike

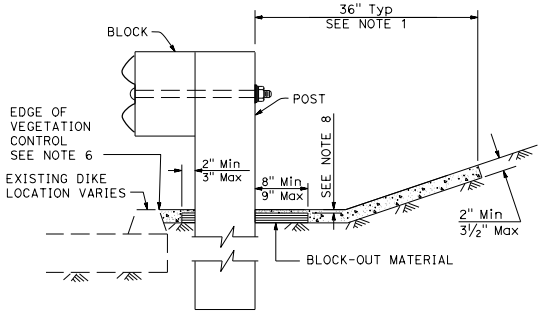

SECTION A-A
With Existing Dike
on cut slope

STATE OF CALIFORNIA
DEPARTMENT OF TRANSPORTATION

MINOR CONCRETE VEGETATION CONTROL GUARDRAIL SYSTEM

NO SCALE

RSP A77N5 DATED JULY 21, 2017 SUPERSEDES STANDARD PLAN A77N5
DATED OCTOBER 30, 2015 - PAGE 57 OF THE STANDARD PLANS BOOK DATED 2015.

REVISED STANDARD PLAN RSP A77N5

2015 REVISED STANDARD PLAN RSP A77N5

5-17-17