© 2018 California Department of Transportation
All Rights Reserved

Dist	COUNTY	ROUTE	POST MILES TOTAL PROJECT	SHEET No.	TOTAL SHEETS

Randell D. Hiatt
REGISTERED CIVIL ENGINEER

April 20, 2018
PLANS APPROVAL DATE

REGISTERED PROFESSIONAL ENGINEER
Randell D. Hiatt
No. C50200
Exp. 6-30-19
CIVIL
STATE OF CALIFORNIA

THE STATE OF CALIFORNIA OR ITS OFFICERS OR AGENTS SHALL NOT BE RESPONSIBLE FOR THE ACCURACY OR COMPLETENESS OF SCANNED COPIES OF THIS PLAN SHEET.

TO ACCOMPANY PLANS DATED _____

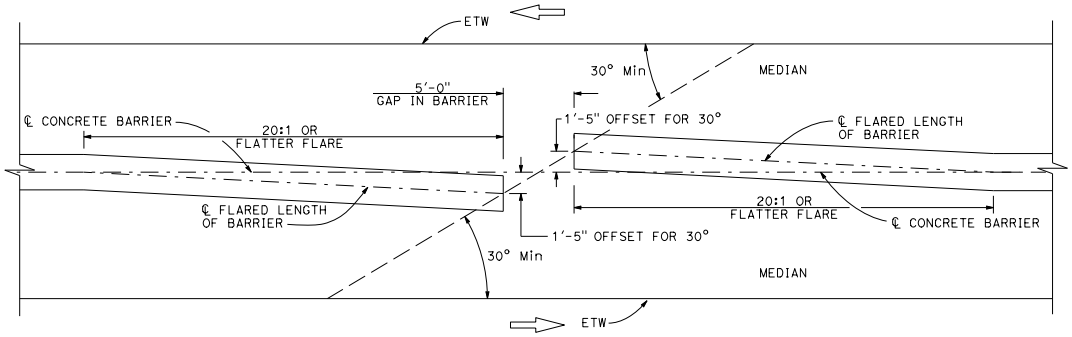

PLAN

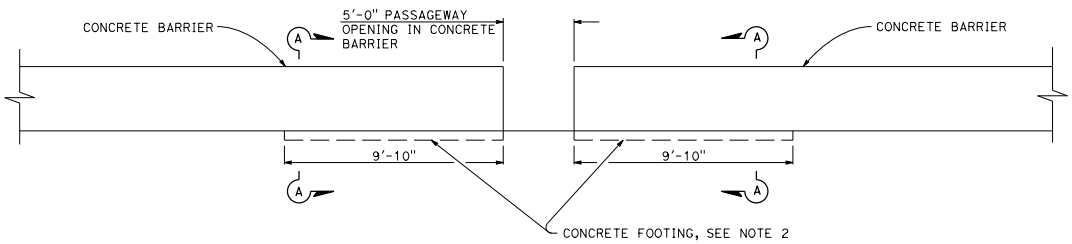

ELEVATION

NOTES:

1. Type ML Passageway typically used for crossing of large size animals.
2. Barrier end anchorage shall be constructed as shown in Section A-A of this plan or as shown on Revised Standard Plan RSP A76B.

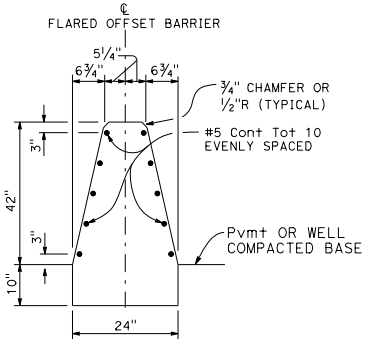

SECTION A-A
See Note 2

STATE OF CALIFORNIA
DEPARTMENT OF TRANSPORTATION

CONCRETE BARRIER WILDLIFE PASSAGEWAY (TYPE ML)

NO SCALE

RSP A76L DATED APRIL 20, 2018 SUPERSEDES STANDARD PLAN A76L
DATED OCTOBER 30, 2015 - PAGE 48 OF THE STANDARD PLANS BOOK DATED 2015.

REVISED STANDARD PLAN RSP A76L

2015 REVISED STANDARD PLAN RSP A76L

12-1-17