© 2018 California Department of Transportation
All Rights Reserved

Dist	COUNTY	ROUTE	POST MILES TOTAL PROJECT	SHEET No.	TOTAL SHEETS

REGISTERED CIVIL ENGINEER

October 19, 2018
PLANS APPROVAL DATE

REGISTERED PROFESSIONAL ENGINEER
Tiliat Satter
No. C42892
Exp. 3-31-20
CIVIL
STATE OF CALIFORNIA

THE STATE OF CALIFORNIA OR ITS OFFICERS OR AGENTS SHALL NOT BE RESPONSIBLE FOR THE ACCURACY OR COMPLETENESS OF SCANNED COPIES OF THIS PLAN SHEET.

TO ACCOMPANY PLANS DATED _____

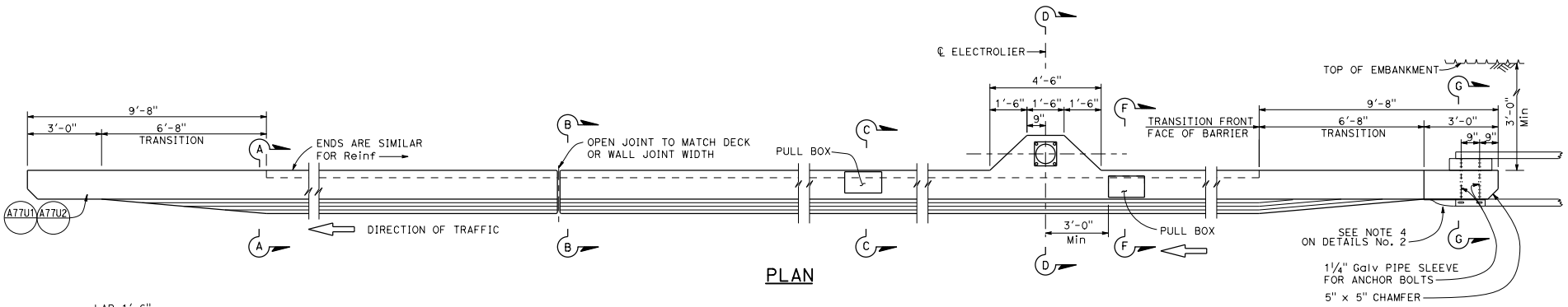

PLAN

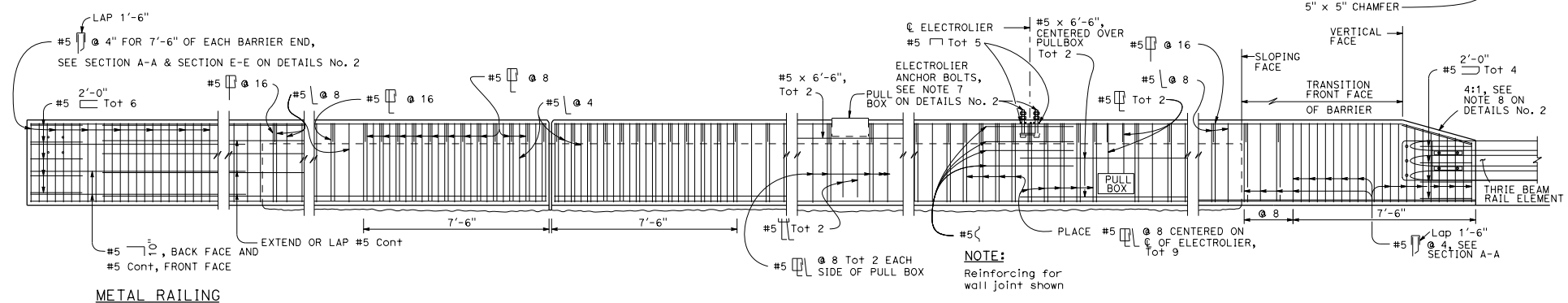

NOTE:
Reinforcing for wall joint shown

METAL RAILING CONNECTION

DECK OR WALL JOINT

ELECTROLIER
(SEE NOTE 5 ON DETAILS No. 2)

ELEVATION

STATE OF CALIFORNIA
DEPARTMENT OF TRANSPORTATION

CONCRETE BARRIER TYPE 842
DETAILS No. 1

NO SCALE

RSP B11-81 DATED OCTOBER 19, 2018 SUPPLEMENTS THE STANDARD PLANS BOOK DATED 2018.

REVISED STANDARD PLAN RSP B11-81

2018 REVISED STANDARD PLAN RSP B11-81

2-21-18