© 2018 California Department of Transportation
All Rights Reserved

Dist	COUNTY	ROUTE	POST MILES TOTAL PROJECT	SHEET No.	TOTAL SHEETS

REGISTERED CIVIL ENGINEER

October 19, 2018
PLANS APPROVAL DATE

REGISTERED PROFESSIONAL ENGINEER Stanley P. Johnson No. C57793 Exp. 3-31-20 CIVIL STATE OF CALIFORNIA

THE STATE OF CALIFORNIA OR ITS OFFICERS OR AGENTS SHALL NOT BE RESPONSIBLE FOR THE ACCURACY OR COMPLETENESS OF SCANNED COPIES OF THIS PLAN SHEET.

TO ACCOMPANY PLANS DATED _____

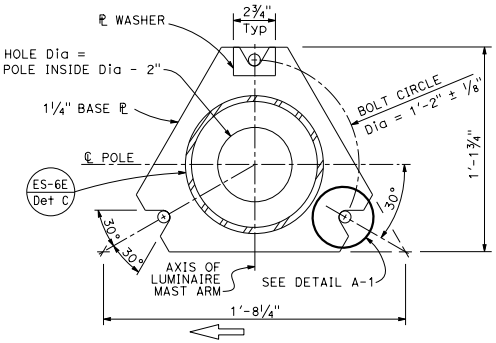

BASE PLATE
DETAIL A

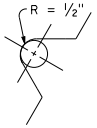

DETAIL A-1

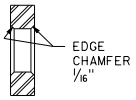

SECTION A-A

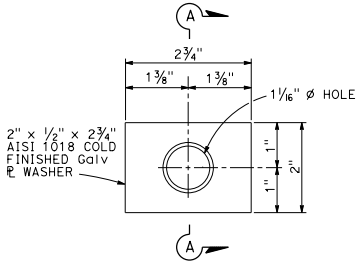

PLATE WASHER
DETAIL D

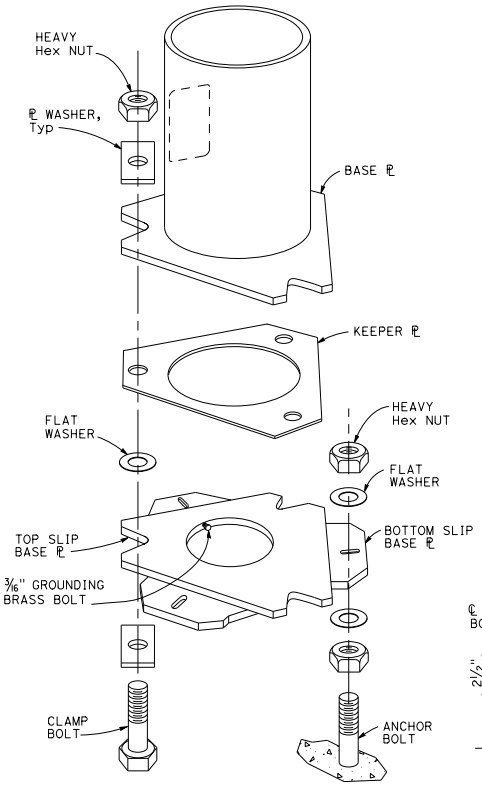

SLIP BASE DETAIL
DETAIL F

NOTES:

1. 1" Ø HS anchor bolts. For clamp bolts, see specifications.
2. Conduit shall not protrude more than 2" above top of foundation.
3. Handhole shall be located on the downstream side of traffic.
4. For Type 30 fixed base and for Type 31 fixed base, see Notes 2 and 3 on Standard Plan ES-6E.

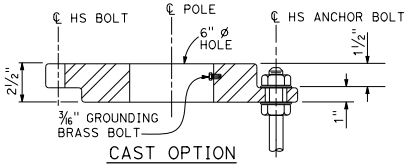

CAST OPTION

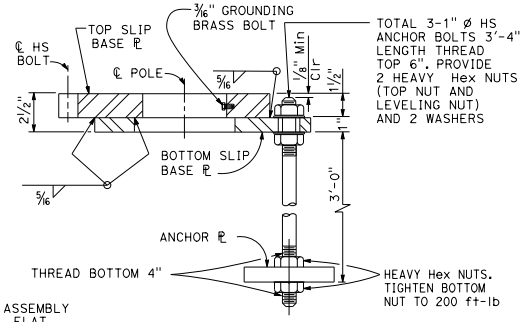

WELDED OPTION
SECTION B-B

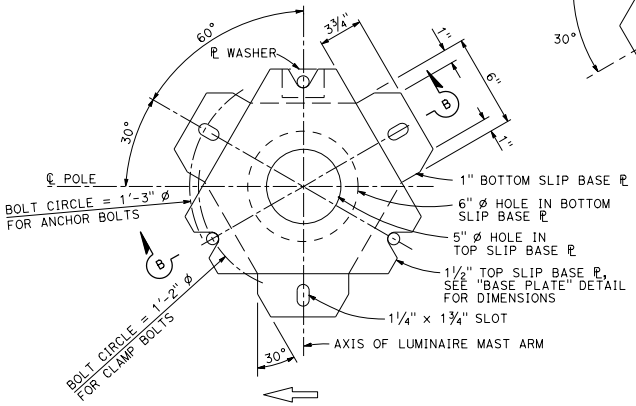

BOTTOM PLATE
DETAIL C

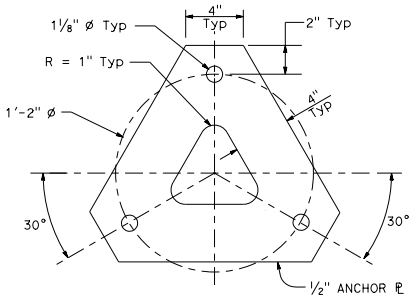

ANCHOR PLATE
DETAIL E

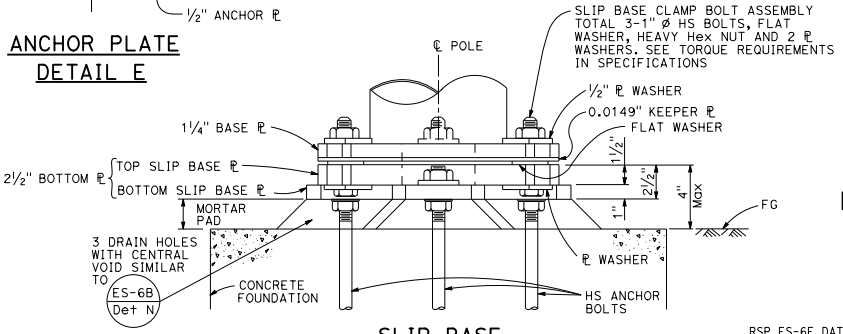

SLIP BASE
ELEVATION A

STATE OF CALIFORNIA
DEPARTMENT OF TRANSPORTATION

ELECTRICAL SYSTEMS (LIGHTING STANDARD, SLIP BASE PLATE)

NO SCALE

RSP ES-6F DATED OCTOBER 19, 2018 SUPERSEDES STANDARD PLAN ES-6F
DATED MAY 31, 2018 - PAGE 513 OF THE STANDARD PLANS BOOK DATED 2018.

REVISED STANDARD PLAN RSP ES-6F

2018 REVISED STANDARD PLAN RSP ES-6F

5-21-18