Dist	COUNTY	ROUTE	POST MILES TOTAL PROJECT	SHEET No.	TOTAL SHEETS

Randell D. Hiatt
REGISTERED CIVIL ENGINEER

May 31, 2018
PLANS APPROVAL DATE

REGISTERED PROFESSIONAL ENGINEER
Randell D. Hiatt
No. C50200
Exp. 6-30-19
CIVIL
STATE OF CALIFORNIA

THE STATE OF CALIFORNIA OR ITS OFFICERS OR AGENTS SHALL NOT BE RESPONSIBLE FOR THE ACCURACY OR COMPLETENESS OF SCANNED COPIES OF THIS PLAN SHEET.

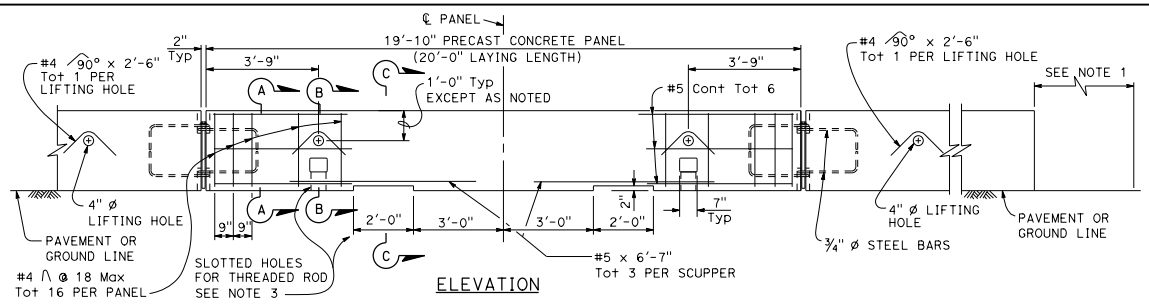

ELEVATION

TYPICAL PANEL

Weight per panel: 3.9 tons

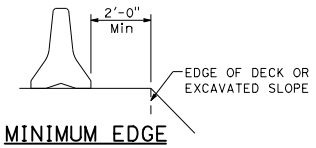

MINIMUM EDGE DISTANCE

See Note 3

NOTES:

1. For end treatment, layout and crash cushions, where needed, see Project Plans or Special Provisions.
2. All 3½" gaps at removable panels are to be backed at the base with #8 x 10" dowel or 1" ø pin each side of joint. See Section G-G.
3. Where the offset distance from the exposed edge of deck to the closest edge of the temporary railing is less than 2'-0", attach each panel to deck slab with 1" diameter threaded rods (total four per panel) inserted through the slotted holes of the panel and bond in drilled holes 6" deep in the deck slabs. See "Bridge Memo to Designers" Manual.

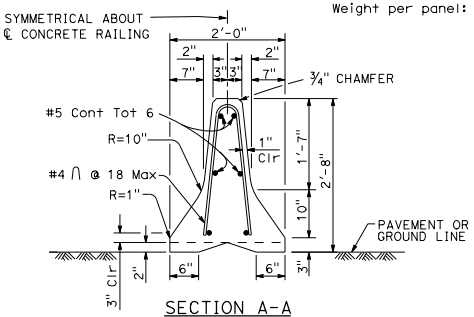

SECTION A-A

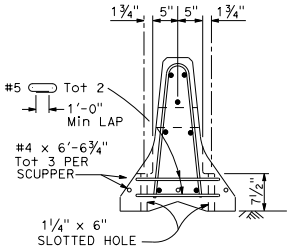

SECTION B-B

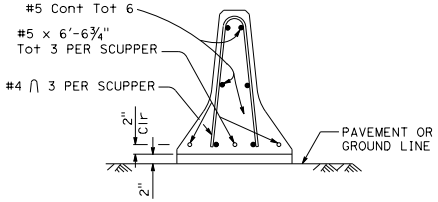

SECTION C-C

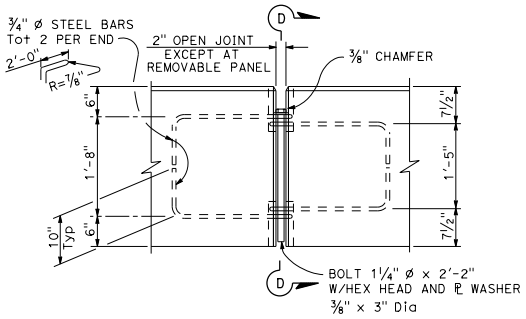

ELEVATION

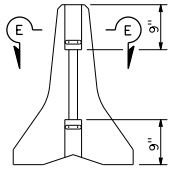

SECTION D-D

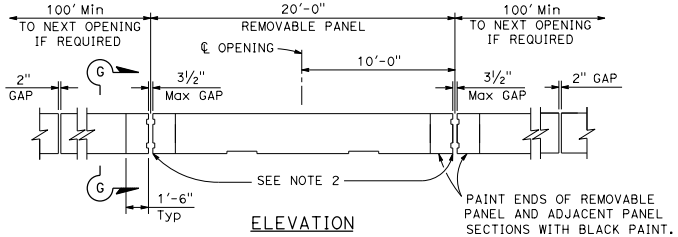

ELEVATION

TYPICAL OPENING DETAIL

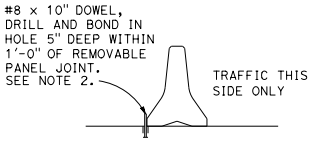

SECTION G-G *

* Section G-G is for concrete pavement. Alternative detail, 1" ø pins 2'-0" long driven in existing AC or HMA.

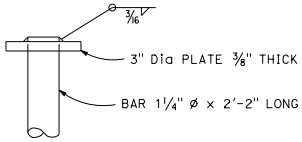

ALTERNATIVE HEAD DETAIL

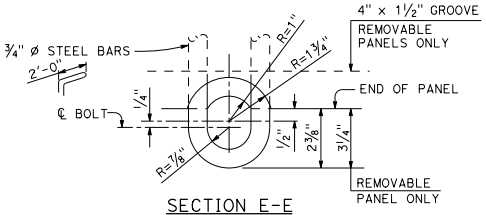

SECTION E-E

BOLT CONNECTION DETAIL

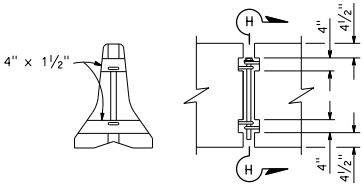

SECTION H-H ELEVATION

REMOVABLE PANEL GROOVE DETAILS

STATE OF CALIFORNIA
DEPARTMENT OF TRANSPORTATION

TEMPORARY RAILING (TYPE K)

NO SCALE

T3A

2018 STANDARD PLAN T3A

1-29-18