Dist	COUNTY	ROUTE	POST MILES TOTAL PROJECT	SHEET No.	TOTAL SHEETS

REGISTERED CIVIL ENGINEER

May 31, 2018

PLANS APPROVAL DATE

Stanley P. Johnson No. C57793 Exp. 3-31-20 CIVIL STATE OF CALIFORNIA REGISTERED PROFESSIONAL ENGINEER

THE STATE OF CALIFORNIA OR ITS OFFICERS OR AGENTS SHALL NOT BE RESPONSIBLE FOR THE ACCURACY OR COMPLETENESS OF SCANNED COPIES OF THIS PLAN SHEET.

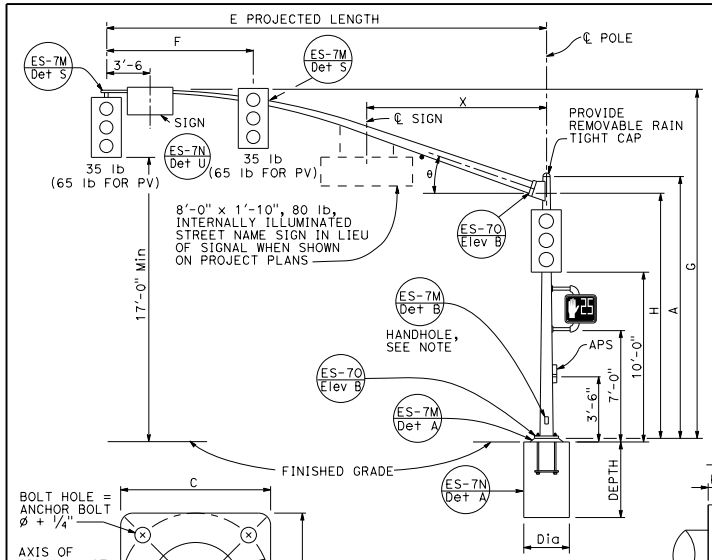

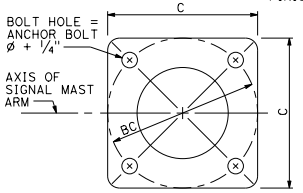

BASE PLATE

DETAIL B

TYPE 16-3-100, 18-3-100, 23-3-100, 27-3-100

ELEVATION A

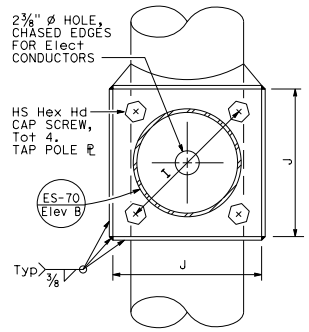

SECTION A-A

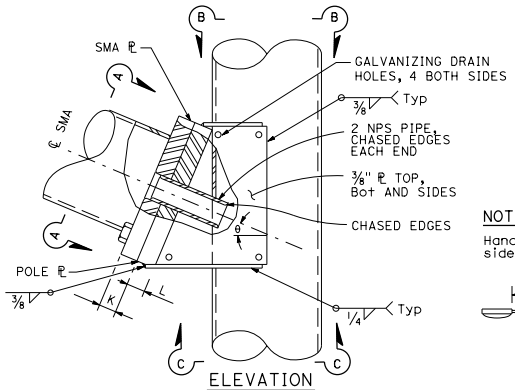

ELEVATION

SIGNAL MAST ARM CONNECTION

DETAIL A

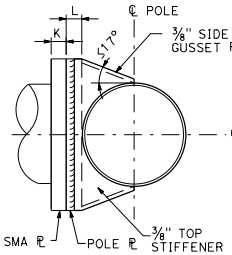

SECTION B-B

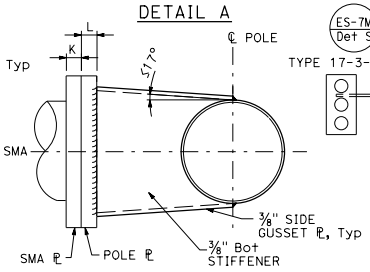

SECTION C-C

NOTE:

Handhole shall be located on the downstream side of traffic.

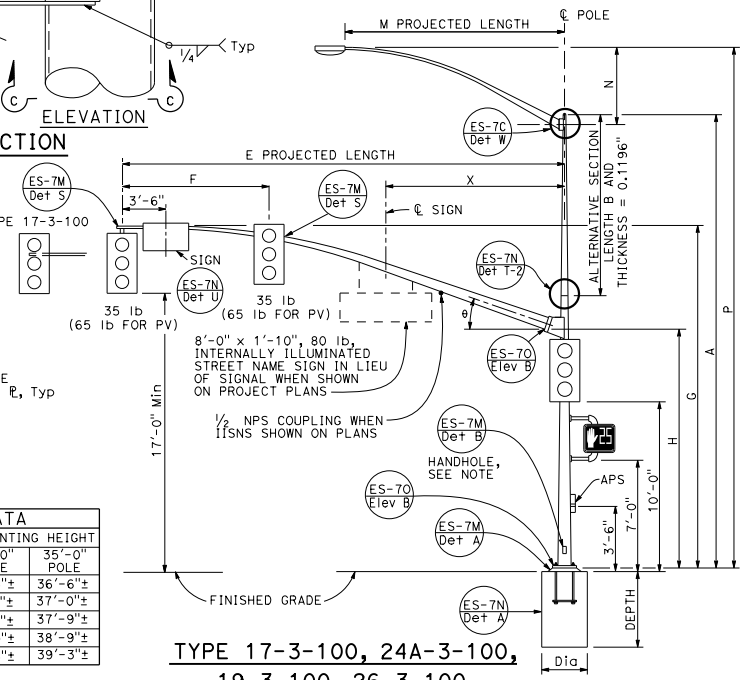

TYPE 17-3-100, 24A-3-100, 19-3-100, 26-3-100, 19A-3-100, 26A-3-100, 24-3-100

ELEVATION B

SIGNAL MAST ARM DATA												
E PROJECTED LENGTH	F Min SPACING	G MOUNTING HEIGHT	H	Min OD AT POLE	THICKNESS	I BOLT CIRCLE	HS CAP SCREWS	J PLATE SIZE	K MAST ARM ℄ THICKNESS	L POLE ℄ THICKNESS	θ	X Max
15'-0"	8'-0"	21'-8"±	17'-6"	7 3/8"	0.1793"	12"	1 1/4"-7NC-3"	1'-3"	1 1/4"	1 1/2"	23°	-
20'-0"		21'-8"±		7 3/8"								
25'-0"	12'-0"	22'-8"±	16'-0"	7 3/8"	0.2391"							10'-6"
30'-0"				8"								
35'-0"	14'-0"	23'-0"±		8 3/4"		13"			1 1/2"	1 3/4"	21°	
40'-0"	15'-0"			9 3/8"							15°	13'-0"
45'-0"		23'-8"±		10 1/16"				1'-5"				

LUMINAIRE MAST ARM DATA					
M PROJECTED LENGTH	N RISE	Min OD AT POLE	THICKNESS	P MOUNTING HEIGHT 30'-0" POLE	P MOUNTING HEIGHT 35'-0" POLE
6'-0"	2'-0"±	3 1/4"	0.1196"	31'-6"±	36'-6"±
8'-0"	2'-6"±	3 1/2"		32'-0"±	37'-0"±
10'-0"	3'-3"±	3 7/8"		32'-9"±	37'-9"±
12'-0"	4'-3"±			33'-9"±	38'-9"±
15'-0"	4'-9"±	4 1/4"		34'-3"±	39'-3"±

POLE TYPE	LOAD CASE	WIND VELOCITY (mph)	POLE DATA: A HEIGHT	Min OD BASE	Min OD TOP	THICKNESS	ALTERNATIVE SECTION B LENGTH	ALTERNATIVE SECTION BOTTOM	ALTERNATIVE SECTION TOP	BASE PLATE DATA: C	BC = BOLT CIRCLE	THICKNESS	ANCHOR BOLT SIZE	LUMINAIRE MAST ARM	SIGNAL MAST ARM	CIDH PILE FOUNDATION Dia	CIDH PILE FOUNDATION DEPTH
16-3-100	3	100	18'-6"	16"	13 3/8"	0.2391" OR 0.25"				1'-11"	1'-9"	3"	2 1/4" ø x 42"	NONE	15'-0", 20'-0"	3'-6"	12'-0"
17-3-100			30'-0"		11 3/4"		10'-0"	13 1/8"	11 3/4"					6'-15' 12'-0"			
18-3-100			17'-0"		13 5/8"									NONE	25'-0", 30'-0"		
19-3-100			30'-0"		11 3/4"		10'-0"	13 1/8"	11 3/4"					6'-15' 12'-0"			
19A-3-100			35'-0"		11"	0.3125"	15'-0"		11"					6'-15' 15'-0"			
23-3-100			17'-0"		13 5/8"	0.2391" OR 0.25"								NONE	35'-0"		
24-3-100			30'-0"		11 3/4"	0.3125"	10'-0"	13 1/8"	11 3/4"					6'-15' 12'-0"			
24A-3-100			35'-0"		11"		15'-0"		11"					6'-15' 15'-0"			
26-3-100			30'-0"	18"	13 3/4"		10'-0"	15 1/8"	13 3/4"	2'-1"	1'-11"			6'-15' 12'-0"	40'-0", 45'-0"		13'-0"
26A-3-100			35'-0"		13"		15'-0"		13"					6'-15' 15'-0"			
27-3-100			17'-0"		15 5/8"									NONE			

[ ] INDICATES MAST ARM LENGTH TO BE USED UNLESS OTHERWISE NOTED ON PLANS.

STATE OF CALIFORNIA
DEPARTMENT OF TRANSPORTATION

ELECTRICAL SYSTEMS (SIGNAL AND LIGHTING STANDARD, CASE 3 SIGNAL MAST ARM LOADING, WIND VELOCITY=100 MPH AND SIGNAL MAST ARM LENGTHS 15' TO 45')

NO SCALE

ES-7E

2018 STANDARD PLAN ES-7E

1-30-18